Cambridge International AS & A Level

Cambridge International Examinations
Cambridge International Advanced Subsidiary and Advanced Level

CANDIDATE NAME

CENTRE NUMBER

CANDIDATE NUMBER

4791138932

PHYSICS **9702/33**

Paper 3 Advanced Practical Skills 1 **May/June 2017**

2 hours

Candidates answer on the Question Paper.

Additional Materials: As listed in the Confidential Instructions.

READ THESE INSTRUCTIONS FIRST

Write your Centre number, candidate number and name on all the work you hand in.
Write in dark blue or black pen.
You may use an HB pencil for any diagrams or graphs.
Do not use staples, paper clips, glue or correction fluid.
DO **NOT** WRITE IN ANY BARCODES.

Answer **both** questions.
You will be allowed to work with the apparatus for a maximum of one hour for each question.
You are expected to record all your observations as soon as these observations are made, and to plan the presentation of the records so that it is not necessary to make a fair copy of them.
You are reminded of the need for good English and clear presentation in your answers.

Electronic calculators may be used.
You may lose marks if you do not show your working or if you do not use appropriate units.

Additional answer paper and graph paper should be used only if it becomes necessary to do so.

At the end of the examination, fasten all your work securely together.
The number of marks is given in brackets [ ] at the end of each question or part question.

For Examiner's Use	
1	
2	
Total	

This document consists of **11** printed pages and **1** blank page.

© UCLES 2017

CAMBRIDGE International Examinations

You may not need to use all of the materials provided.

1 In this experiment, you will investigate the motion of a chain of paper clips.

(a) You have been provided with a chain of fifteen paper clips with a sphere of modelling clay attached to one end of the chain.

Measure and record the length *L* of one paper clip as shown in Fig. 1.1.

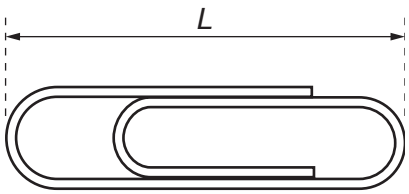

Fig. 1.1

L = ...[1]

(b) (i) Set up the apparatus as shown in Fig. 1.2.

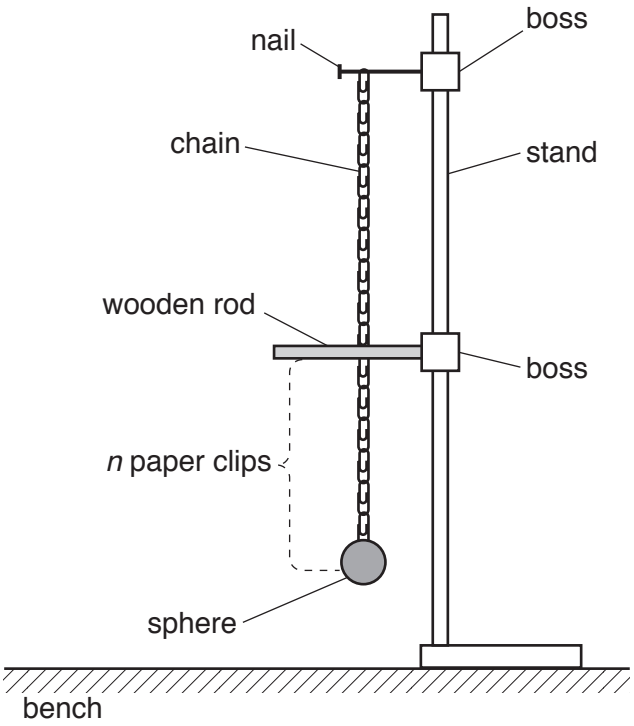

Fig. 1.2

The chain should be suspended from the nail.

The wooden rod should be positioned so that the chain, when hanging vertically, just touches the rod with 6 paper clips below the rod.

(ii) Record the number *n* of paper clips below the rod.

n = ...

(c) Move the sphere towards you through a distance of approximately 10 cm.
Release the sphere. The chain will oscillate and hit the rod during these oscillations.

Determine the period *T* of the oscillations.

T = ... [2]

(d) Change n by moving the wooden rod vertically and repeat **(b)(ii)** and **(c)** until you have six sets of values of n and T.

Record your results in a table. Include values of $\sqrt{n}$ to three significant figures in your table.

[8]

(e) **(i)** Plot a graph of T on the y-axis against $\sqrt{n}$ on the x-axis. [3]

(ii) Draw the straight line of best fit. [1]

(iii) Determine the gradient and y-intercept of this line.

gradient = ...

y-intercept = ...

[2]

© UCLES 2017

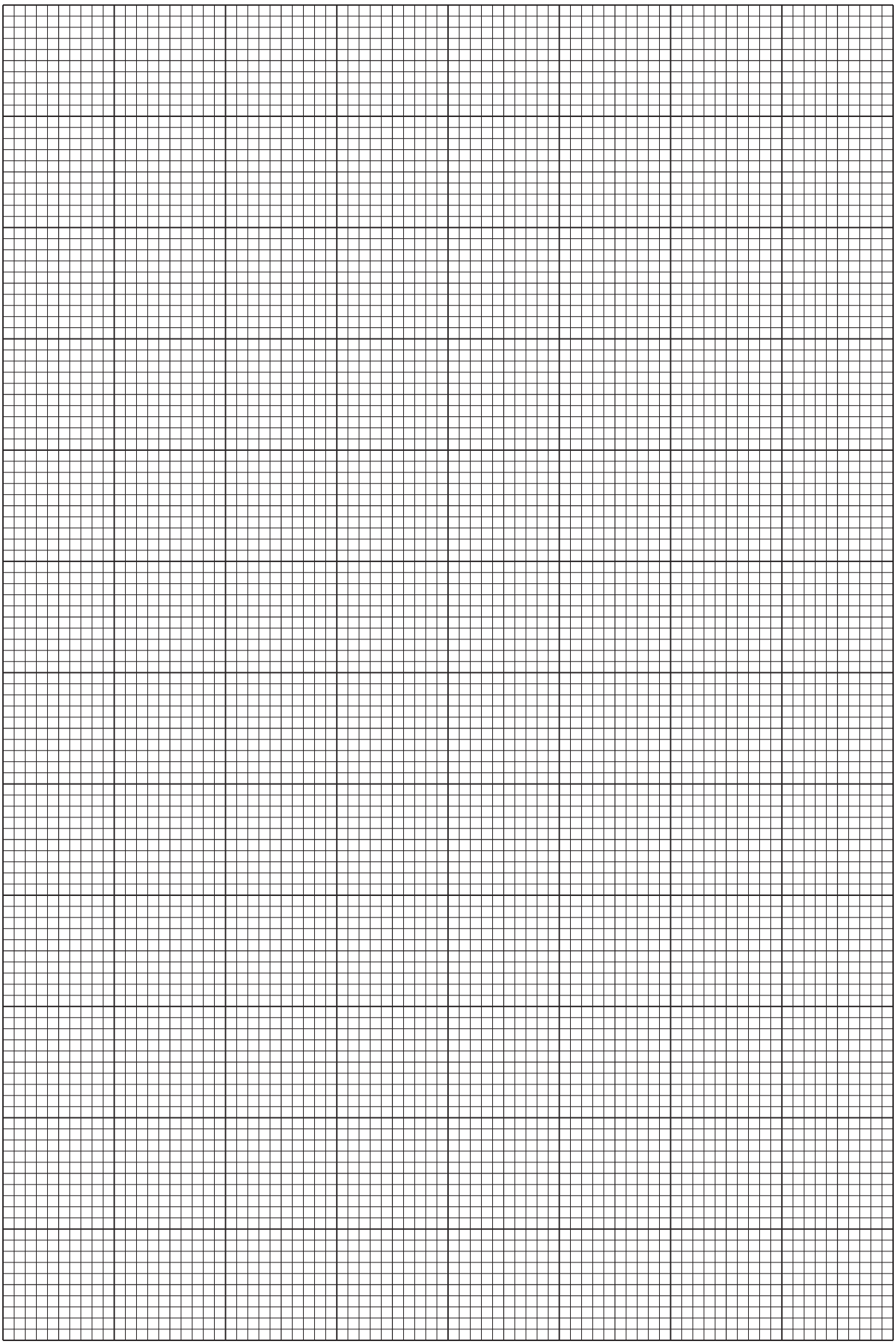

(f) It is suggested that the quantities T and n are related by the equation

$$T = P\sqrt{n} + Q$$

where P and Q are constants.

Using your answers in **(e)(iii)**, determine the values of P and Q.
Give appropriate units.

P = ...

Q = ...
[2]

(g) Theory suggests that

$$P = \pi\sqrt{\frac{L}{g}}$$

where g is the acceleration of free fall.

Use your values in **(a)** and **(f)** to determine a value for g.
Give an appropriate unit.

g = ...[1]

[Total: 20]

You may not need to use all of the materials provided.

2 In this experiment, you will investigate the equilibrium of a balanced metre rule and determine its mass.

(a) You have been provided with a metre rule with a hole close to each end as shown in Fig. 2.1.

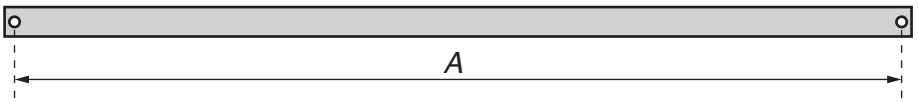

Fig. 2.1

The distance between the centres of the holes is *A*.

Measure and record *A*.

A = ...[1]

(b) **(i)** Set up the apparatus as shown in Fig. 2.2.

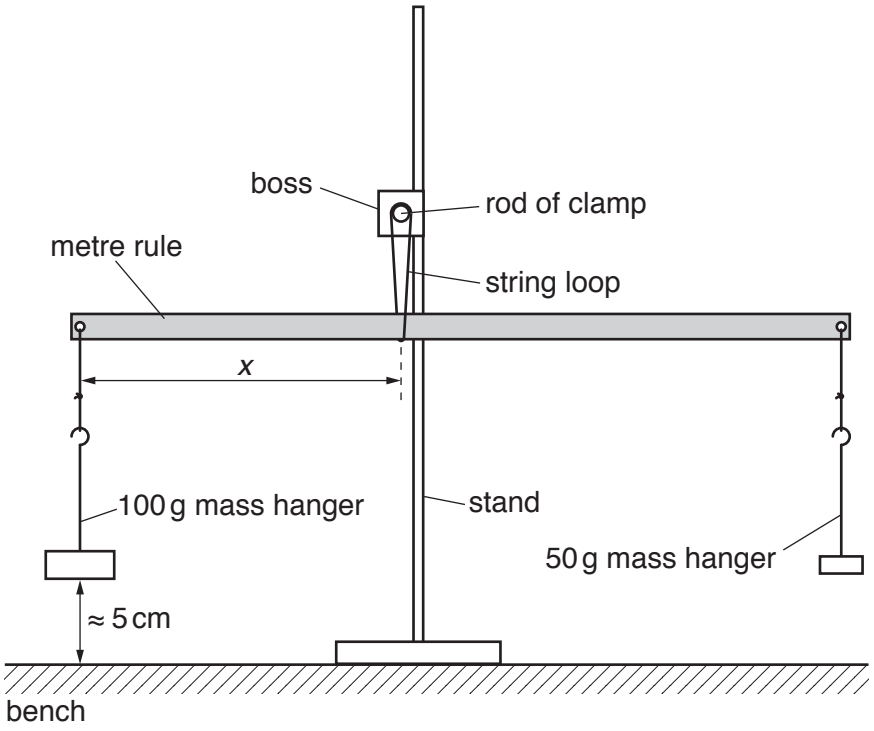

Fig. 2.2

Adjust the position of the rule until it is balanced.

The distance between the centre of the hole from which the 100 g mass hanger is supported and the position of the central string loop is *x*.

(ii) Measure and record *x*.

x = ...[1]

(c) (i) Add a 10 g slotted mass to each mass hanger.

(ii) Adjust the position of the rule until it is balanced.
The distance between the centre of the hole from which the 100 g mass hanger is supported and the position of the central string loop is now y as shown in Fig. 2.3.

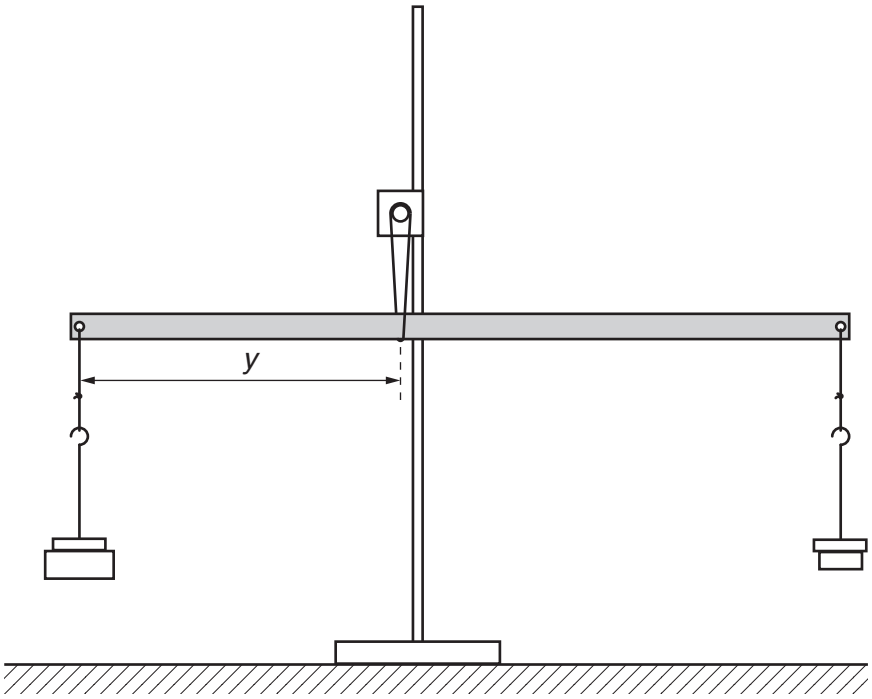

Fig. 2.3

(iii) Measure and record y.

y = ...[1]

(iv) Calculate $(y - x)$.

$(y - x)$ = ...[1]

(v) Estimate the percentage uncertainty in your value of $(y - x)$.

percentage uncertainty = ...[1]

(d) (i) Calculate $m(A - 2y)$ where $m = 10.0\,\text{g}$.

$m(A - 2y) =$ .....[1]

(ii) Justify the number of significant figures that you have given for your value of $m(A - 2y)$.

.....

.....

.....[1]

(e) (i) Add another 10 g mass to each of the mass hangers and repeat **(c)(ii)**, **(c)(iii)** and **(c)(iv)**.

$y =$ .....

$(y - x) =$ .....
[2]

(ii) Calculate $m(A - 2y)$ where $m = 20.0\,\text{g}$.

$m(A - 2y) =$ .....

(f) It is suggested that the relationship between y, x, m and A is

$$(y - x) = km(A - 2y)$$

where k is a constant.

(i) Using your data, calculate two values of k.

first value of k = ...

second value of k = ...

[1]

(ii) Explain whether your results in **(f)(i)** support the suggested relationship.

.....

.....

.....

.....[1]

(g) Using your second value of k, calculate the mass M of the metre rule using the relationship

$$k = \frac{1}{B + M}$$

where $B = 150\,\text{g}$.

M = ... g [1]

© UCLES 2017

(h) (i) Describe four sources of uncertainty or limitations of the procedure for this experiment.

1. .....

.....

2. .....

.....

3. .....

.....

4. .....

..... [4]

(ii) Describe four improvements that could be made to this experiment. You may suggest the use of other apparatus or different procedures.

1. .....

.....

2. .....

.....

3. .....

.....

4. .....

..... [4]

[Total: 20]

© UCLES 2017

BLANK PAGE

Permission to reproduce items where third-party owned material protected by copyright is included has been sought and cleared where possible. Every reasonable effort has been made by the publisher (UCLES) to trace copyright holders, but if any items requiring clearance have unwittingly been included, the publisher will be pleased to make amends at the earliest possible opportunity.

To avoid the issue of disclosure of answer-related information to candidates, all copyright acknowledgements are reproduced online in the Cambridge International Examinations Copyright Acknowledgements Booklet. This is produced for each series of examinations and is freely available to download at www.cie.org.uk after the live examination series.

Cambridge International Examinations is part of the Cambridge Assessment Group. Cambridge Assessment is the brand name of University of Cambridge Local Examinations Syndicate (UCLES), which is itself a department of the University of Cambridge.

© UCLES 2017